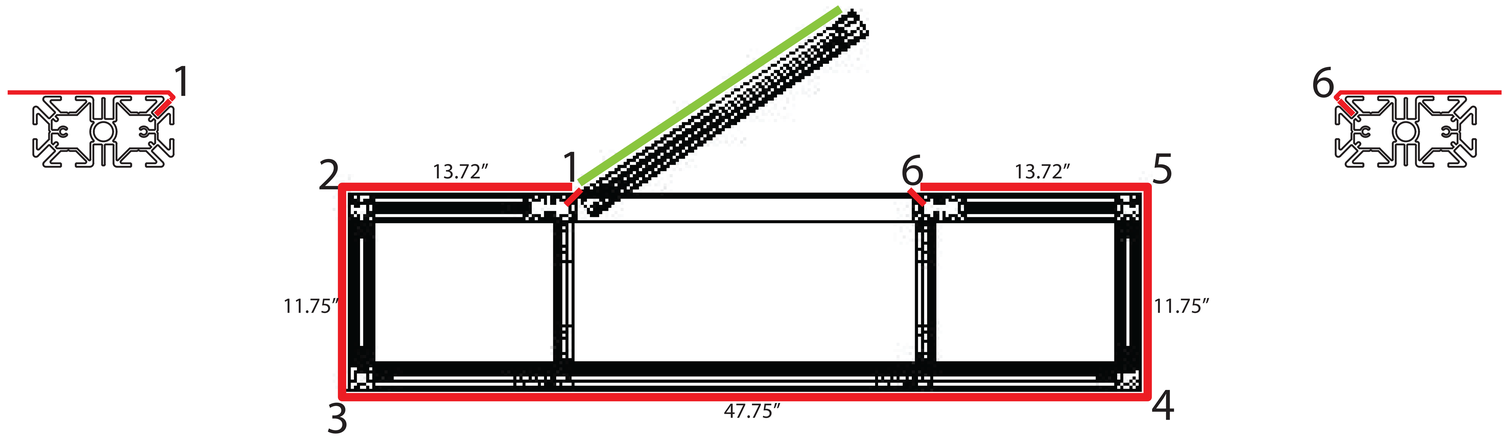

Graphic 1

Open/Live Area

98.690”w x 35.840”h

Print/Final

99.676”w x 36.826”h

Graphic 2

Open/Live Area

19.843”w x 34.843”h

Print/Final

20.829”w x 35.829”h

OVERALL LIVE AREA SIZE:
118.73” x 35.84”

OVERALL DESIGN SIZE:
119.72” x 36.83”

TEMPLATE IS AT FULL SCALE

start/stop point on frame
corner/wrap location
(NOTE - Cannot guarantee art placement will fall exact on corner locations - use these areas as a guide).

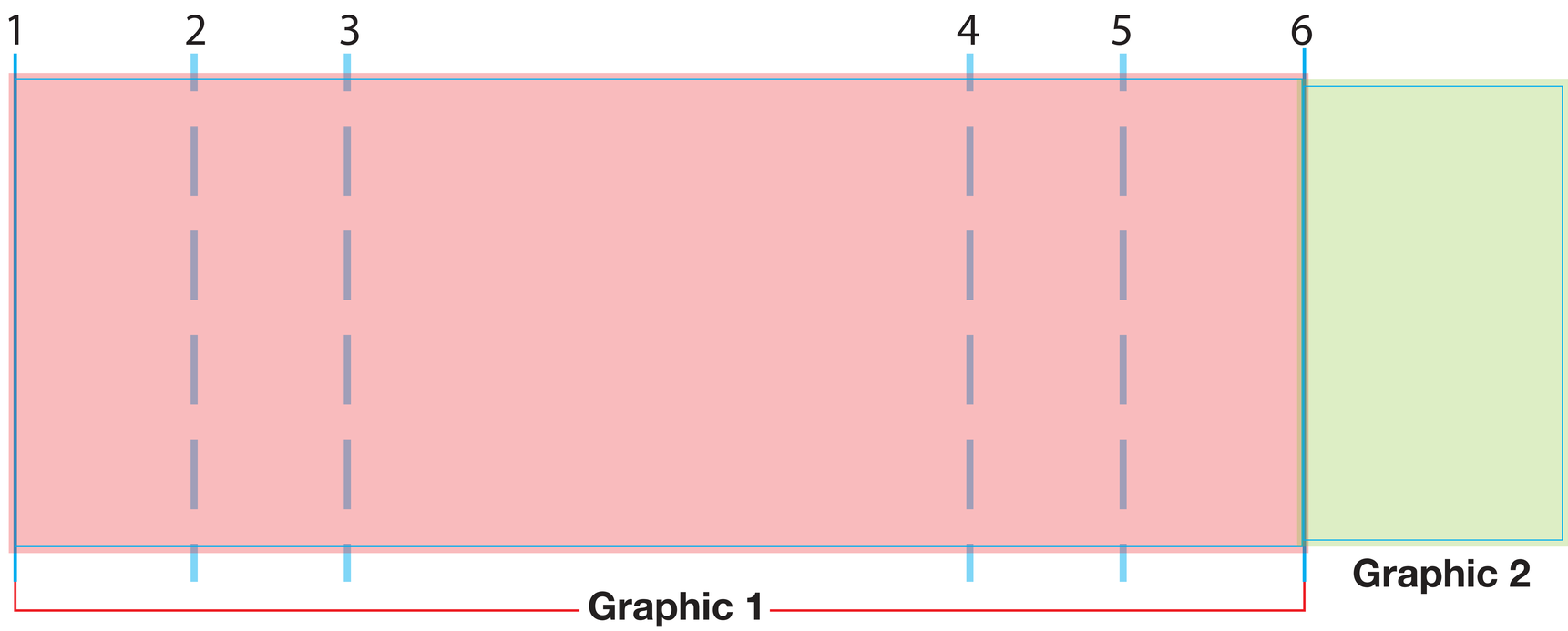

panoramic® www.panoramicsystem.com **Frame** | Component - Pano_Room | Graphic template 031114 RC

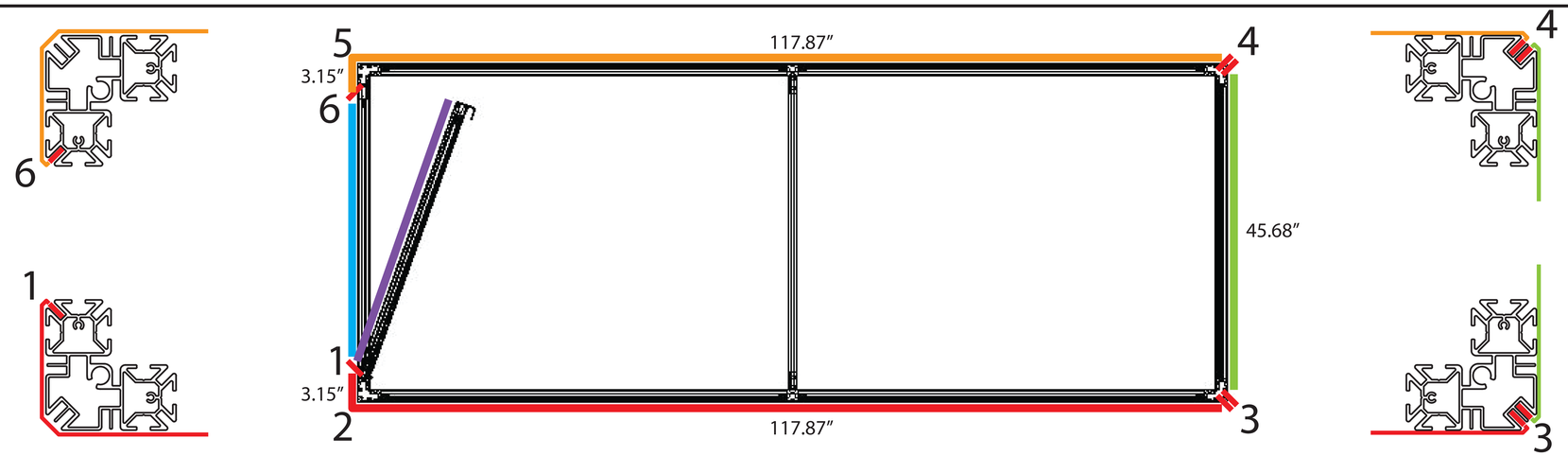

Graphic 1	Graphic 2	Graphic 3	Graphic 4	Graphic 5
Open/Live Area	Open/Live Area	Open/Live Area	Open/Live Area	Open/Live Area
121.020"w x 94.340"h	45.680"w x 94.340"h	121.020"w x 94.340"h	39.223"w x 15.463"h	38.843"w x 77.843"h
Print/Final	Print/Final	Print/Final	Print/Final	Print/Final
122.006"w x 95.326"h	46.666"w x 95.326"h	122.006"w x 95.326"h	40.209"w x 16.449"h	39.829"w x 78.829"h

OVERALL LIVE AREA SIZE:
326.94" x 94.34"

OVERALL DESIGN SIZE:
327.93" x 95.33"

TEMPLATE IS AT 1/2 SCALE

start/stop point on frame
corner/wrap location
(NOTE - Cannot guarantee art placement will fall exact on corner locations - use these areas as a guide).

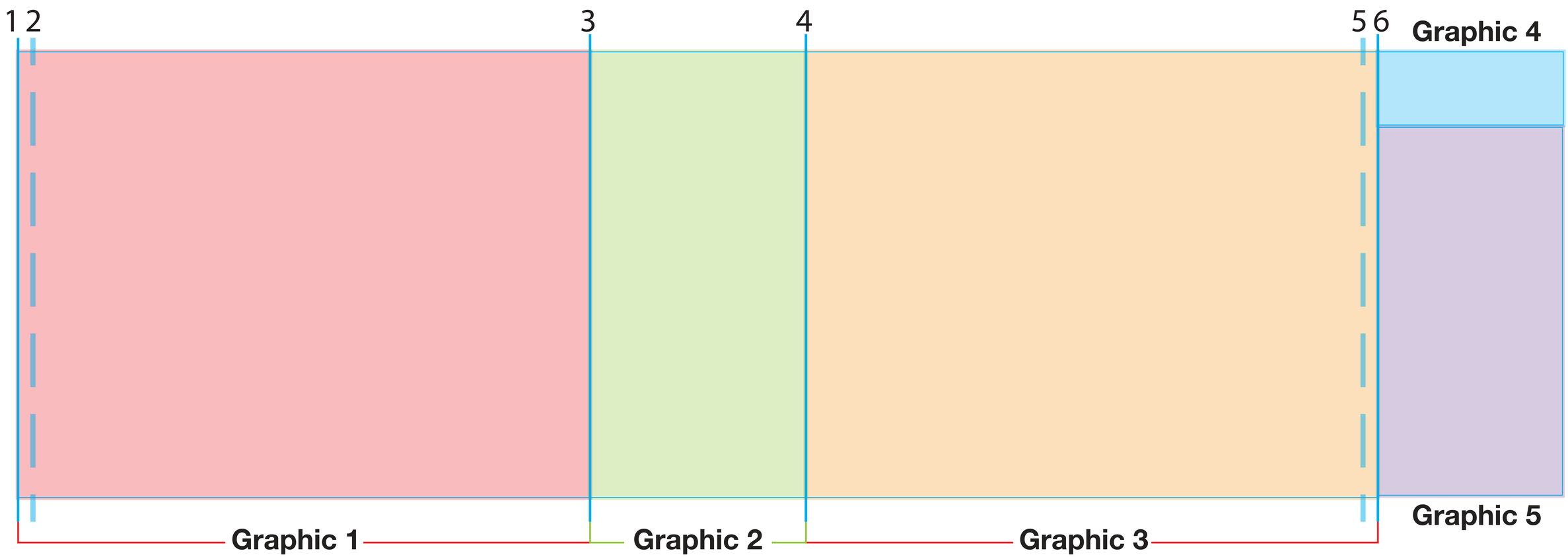

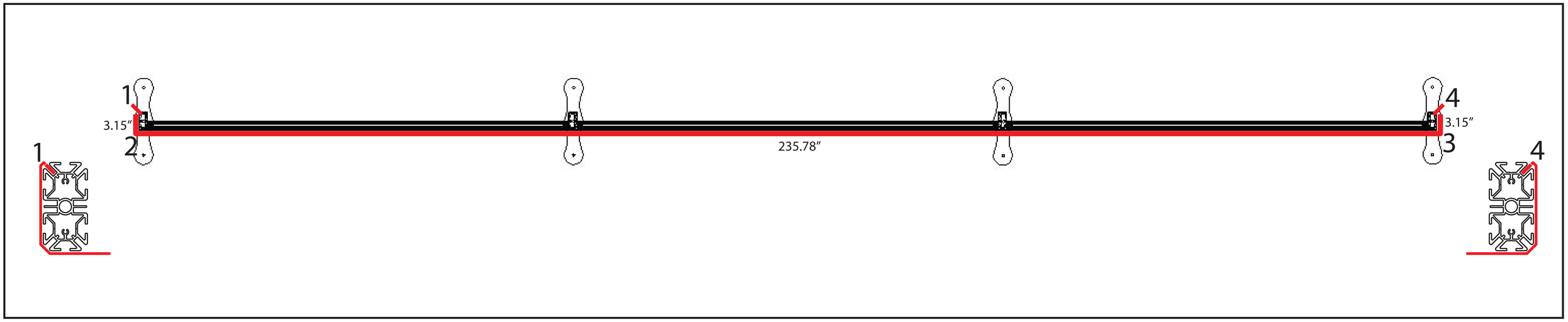

Graphic 1

Open/Live Area

242.080"w x 94.34"h

Print/Final

243.066"w x 95.326"h

OVERALL LIVE AREA SIZE:
242.08" x 94.34"

OVERALL DESIGN SIZE:
243.07" x 95.33"

TEMPLATE IS AT 1/2 SCALE
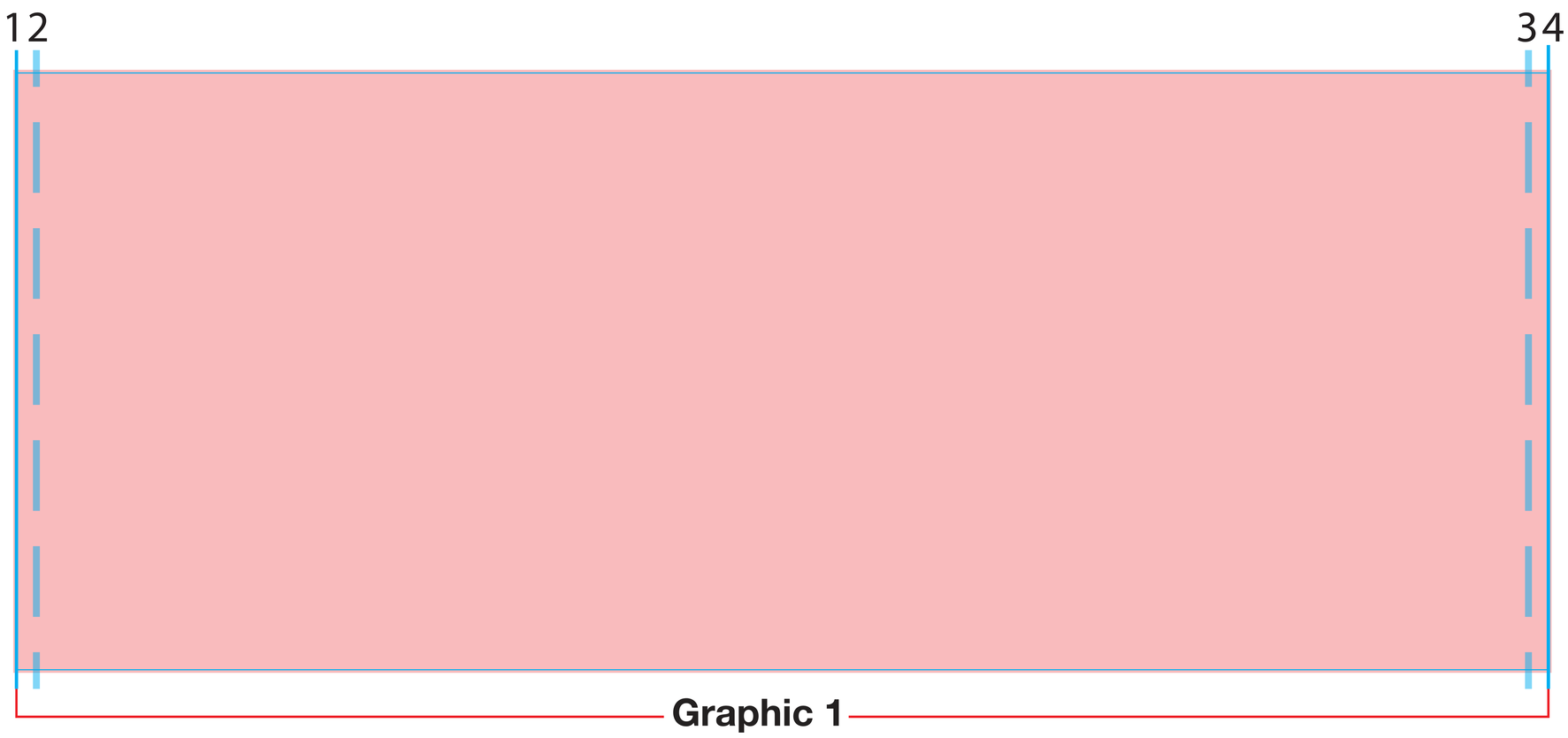
start/stop point on frame
corner/wrap location
(NOTE - Cannot guarantee art placement will fall exact on corner locations - use these areas as a guide).