panoramic® www.panoramicsystem.com **Frame** | Component - Pano_wall | Graphic template | 012115 RFC

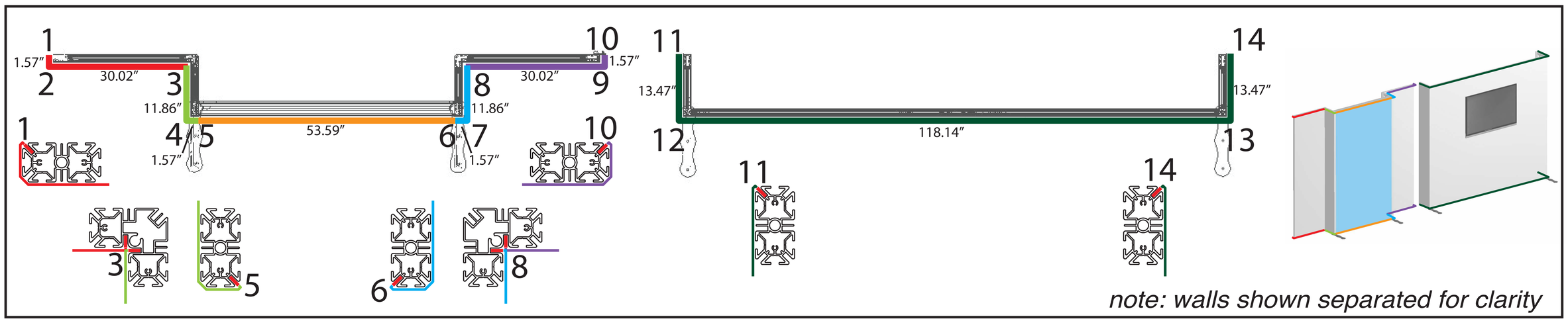

Graphic 1	Graphic 2	Graphic 3	Graphic 4	Graphic 5	Graphic 6
Open/Live Area	Open/Live Area	Open/Live Area	Open/Live Area	Open/Live Area	Open/Live Area
31.590"w x 94.340"h	13.340"w x 94.340"h	55.593"w x 94.343"h	13.340"w x 94.340"h	31.590"w x 94.340"h	145.080"w x 94.340"h
Print/Final	Print/Final	Print/Final	Print/Final	Print/Final	Print/Final
32.576"w x 95.326"h	14.416"w x 95.326"h	56.579"w x 95.329"h	14.416"w x 95.326"h	32.576"w x 95.326"h	146.066"w x 95.326"h

TRIFAB - lightbox

LEFT SIDE
OVERALL LIVE AREA SIZE:
145.63" x 94.34"
OVERALL DESIGN SIZE:
146.62" x 95.33"

RIGHT SIDE
OVERALL LIVE AREA SIZE:
145.08" x 94.34"
OVERALL DESIGN SIZE:
146.07" x 95.33"

TEMPLATE IS AT 1/4 SCALE

start/stop point on frame
corner/wrap location
(NOTE - Cannot guarantee art placement will fall exact on corner locations - use these areas as a guide).

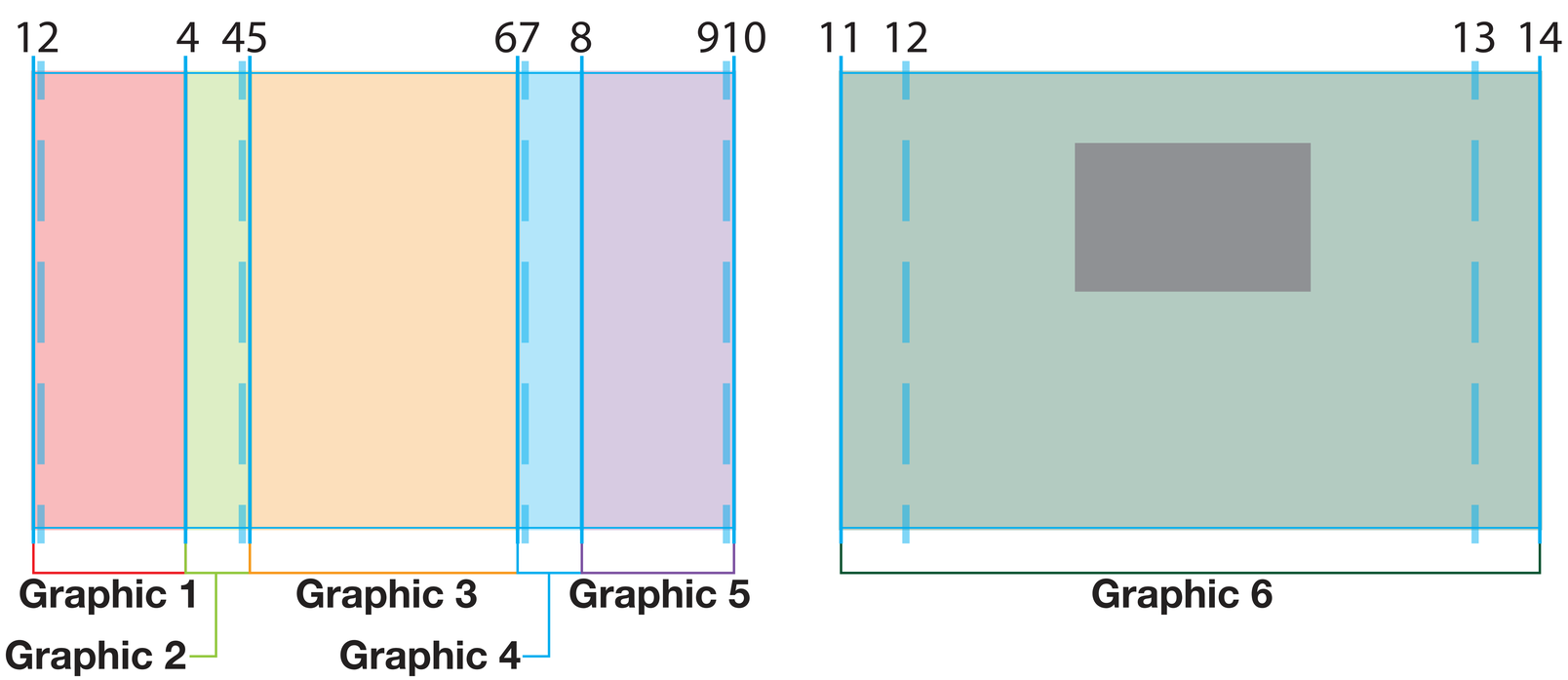

indicates monitor placement do not cut or print

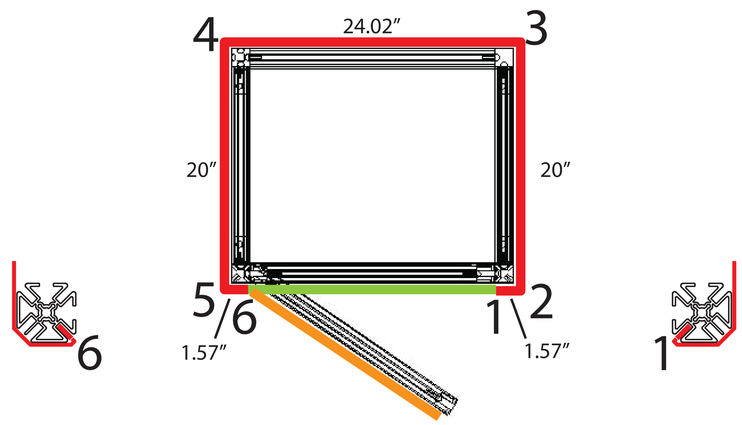

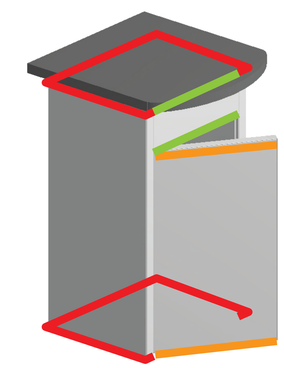

Graphic 1

Open/Live Area

67.160"w x 39.840"h

Print/Final

68.146"w x 40.826"h

Graphic 2

Open/Live Area

20.723"w x 5.843"h

Print/Final

21.709"w x 6.829"h

Graphic 3

Open/Live Area

20.343"w x 32.843"h

Print/Final

21.329"w x 33.829"h

OVERALL LIVE AREA SIZE:
87.88" x 39.84"

OVERALL DESIGN SIZE:
88.87" x 40.83"

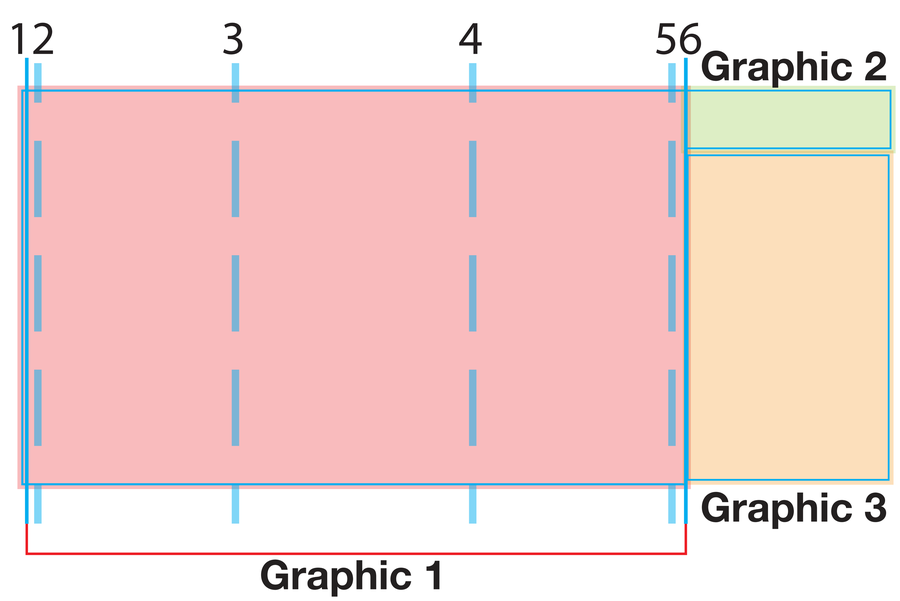

TEMPLATE IS AT 1/2 SCALE

start/stop point on frame

corner/wrap location (NOTE - Cannot guarantee art placement will fall exact on corner locations - use these areas as a guide).

panoramic® www.panoramicsystem.com **Frame** | Component - Pano_large counter | Graphic template | 012115 RFC

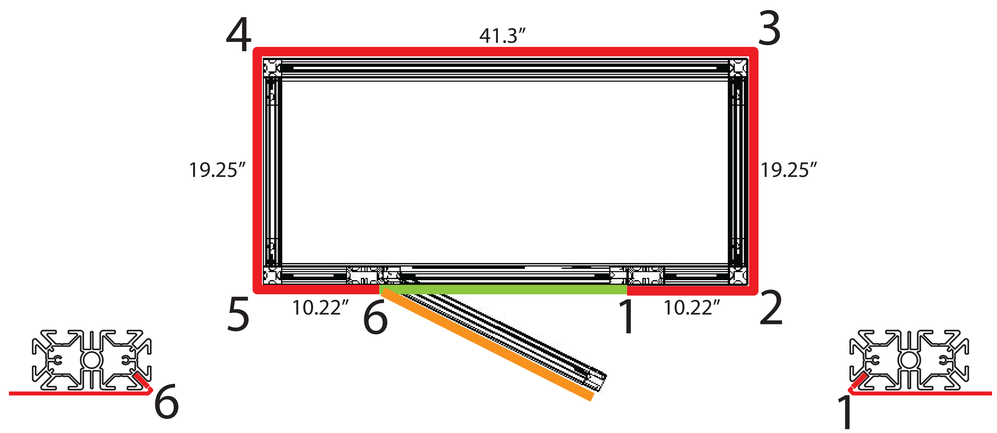

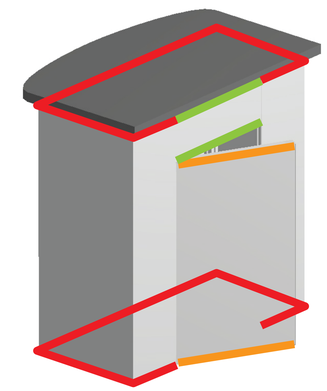

Graphic 1

Open/Live Area

100.240"w x 39.840"h

Print/Final

101.226"w x 40.826"h

Graphic 2

Open/Live Area

20.723"w x 5.843"h

Print/Final

21.709"w x 6.829"h

Graphic 3

Open/Live Area

20.343"w x 32.843"h

Print/Final

21.329"w x 33.829"h

OVERALL LIVE AREA SIZE:
120.96" x 39.84"

OVERALL DESIGN SIZE:
121.95" x 40.83"

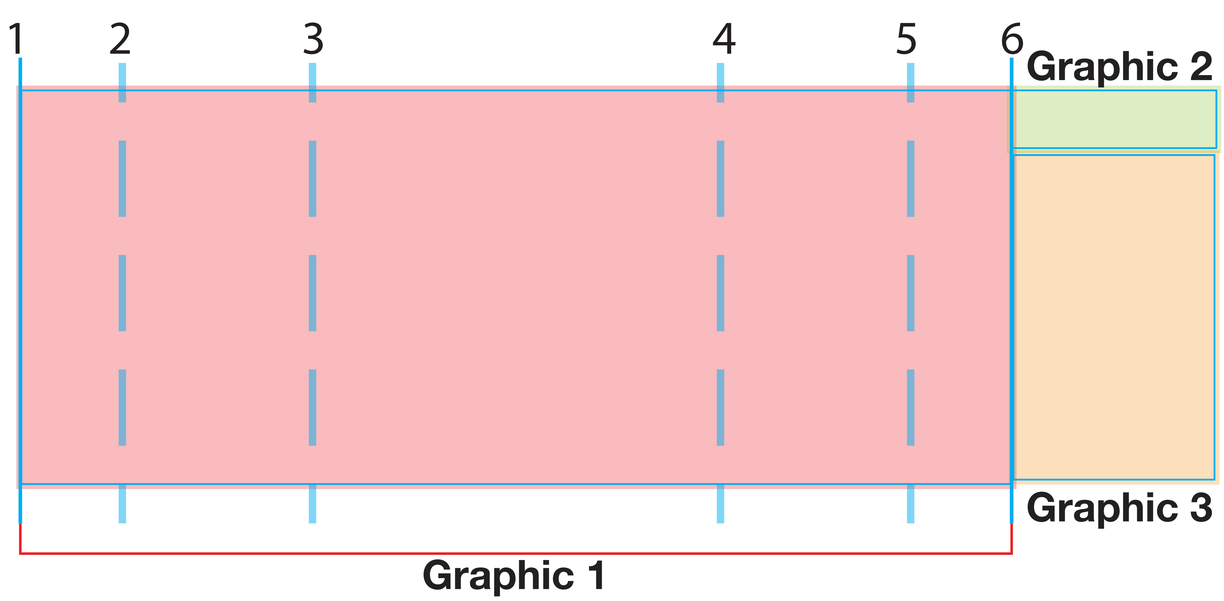

TEMPLATE IS AT 1/2 SCALE

start/stop point on frame
corner/wrap location
(NOTE - Cannot guarantee art placement will fall exact on corner locations - use these areas as a guide).