Panoramic Frame

Component - Pano_Counter_A

Graphic template

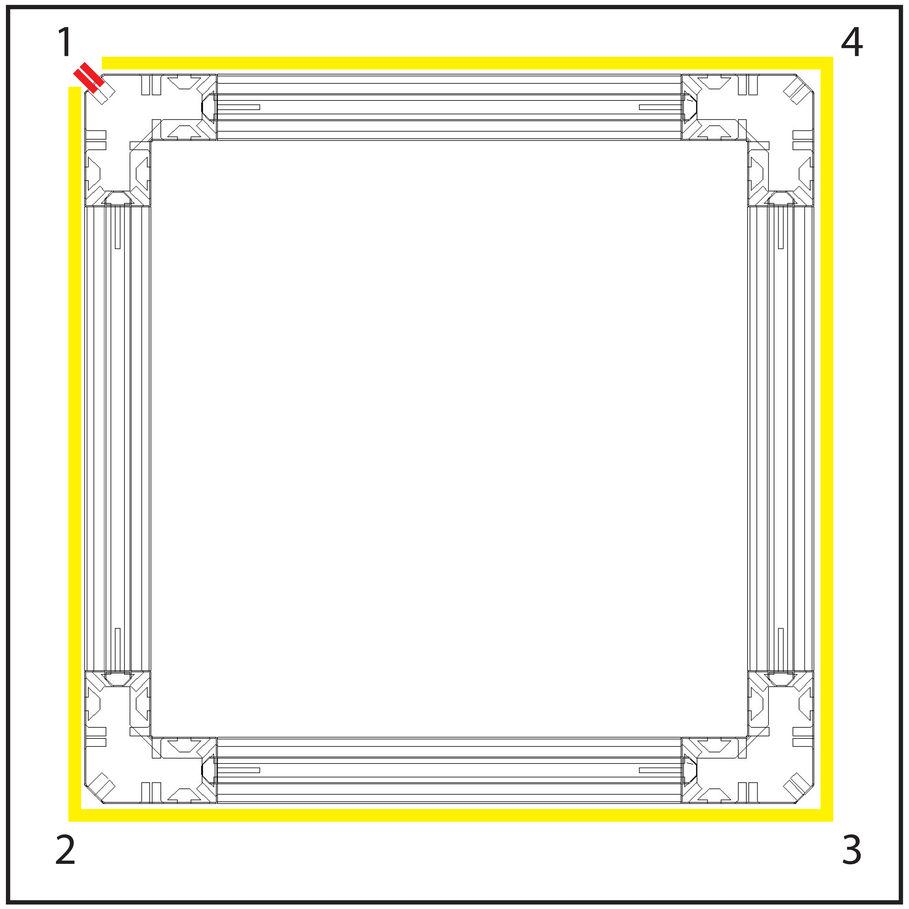

start/stop point on frame

corner/wrap location (NOTE - Cannot guarantee art placement will fall exact on corner locations - use these areas as a guide).

Open/Live Area

69.2”w x 39.34”h

Print/Final

DESIGN TO THIS SIZE

70.186”w x 40.33”h
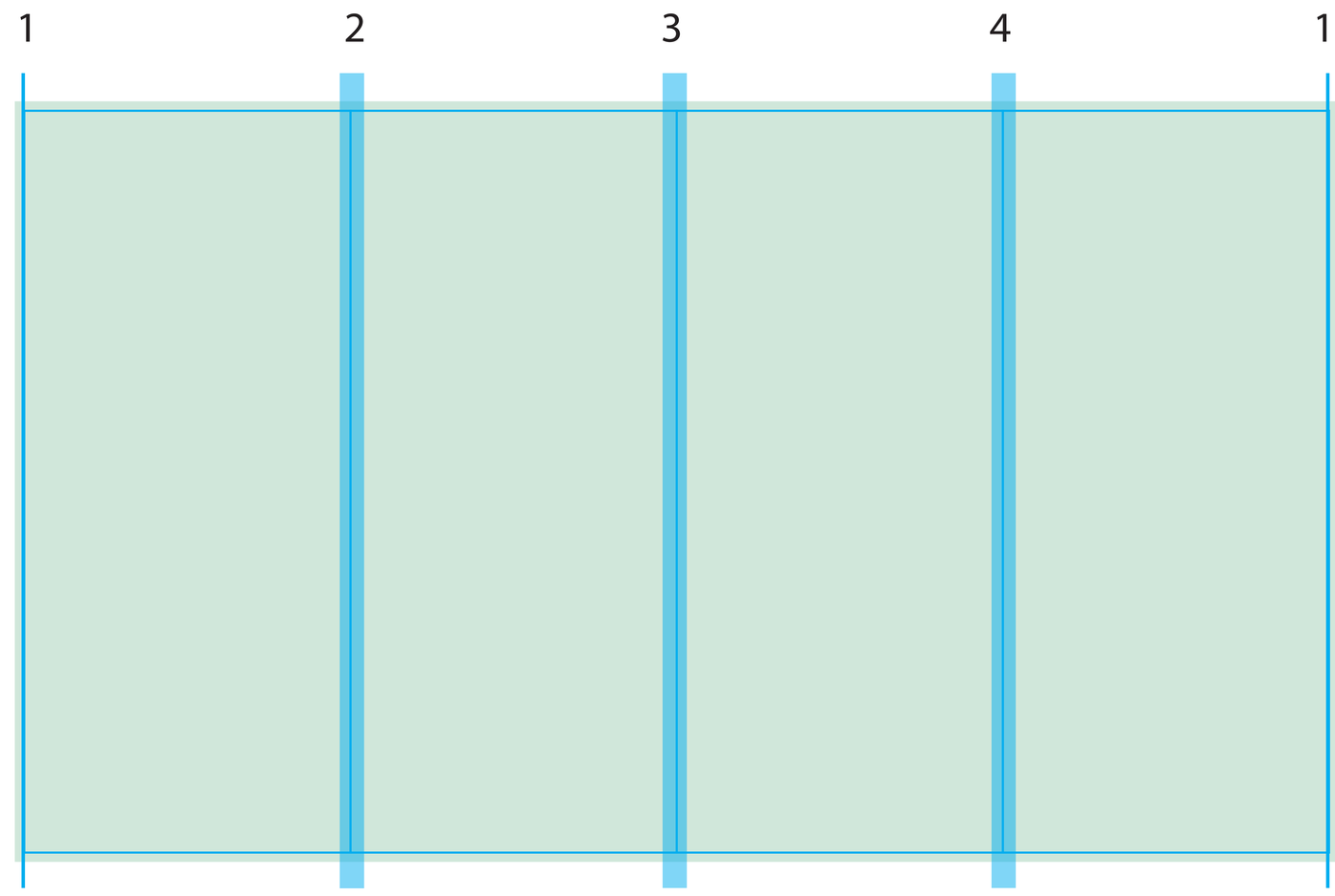
TEMPLATE IS AT FULL SIZE