Quickscreen 3 Mini
19.5x76

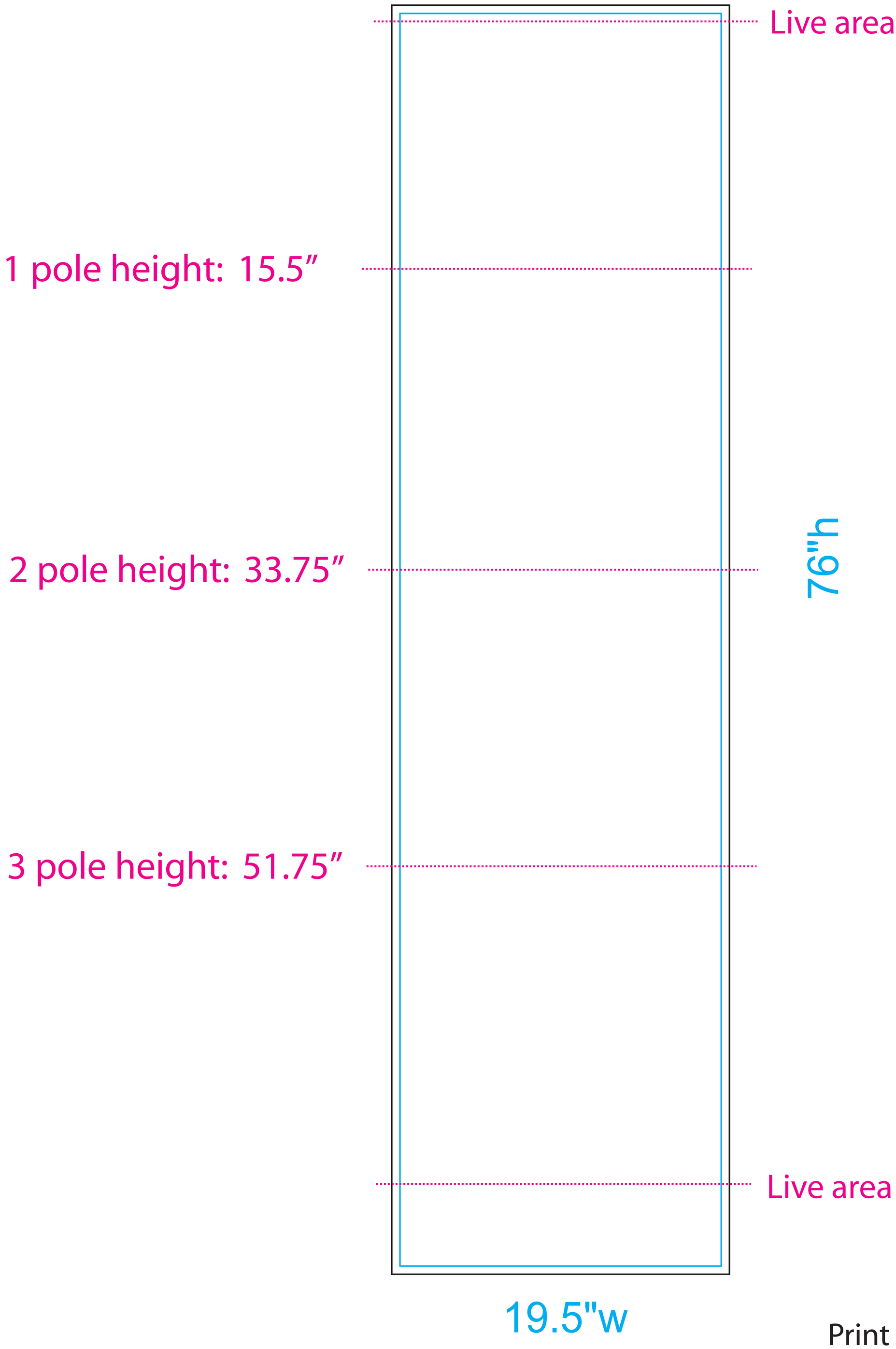

Print Size: 20.5”w x 77”h
Final Size: 19.5”w x 76”h
Live Area: 71” from the top
*Please note that .5” will be covered at the top by a hanger bar.